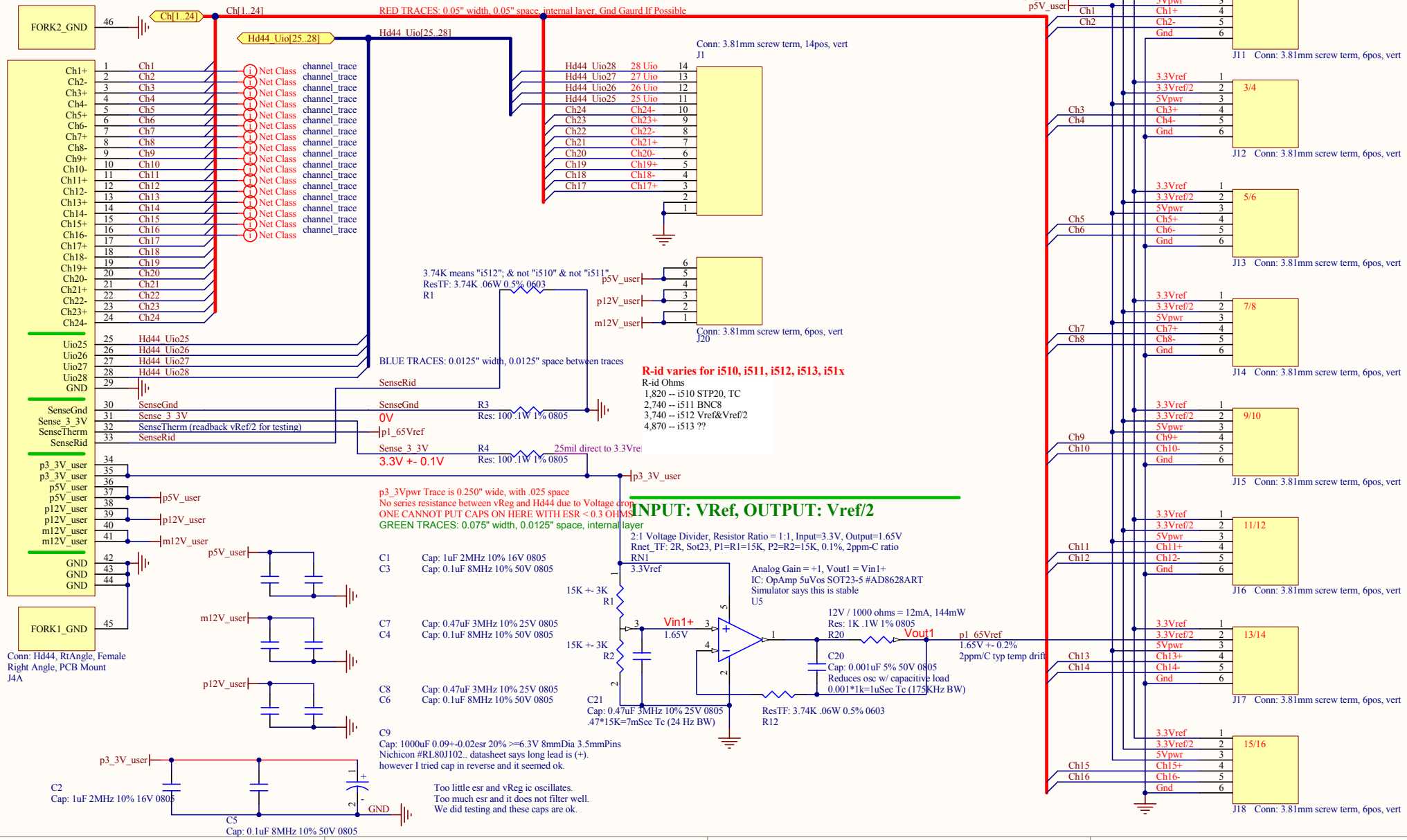i512PCB -- Strain Gage Wiring Box (Vref and Vref/2)